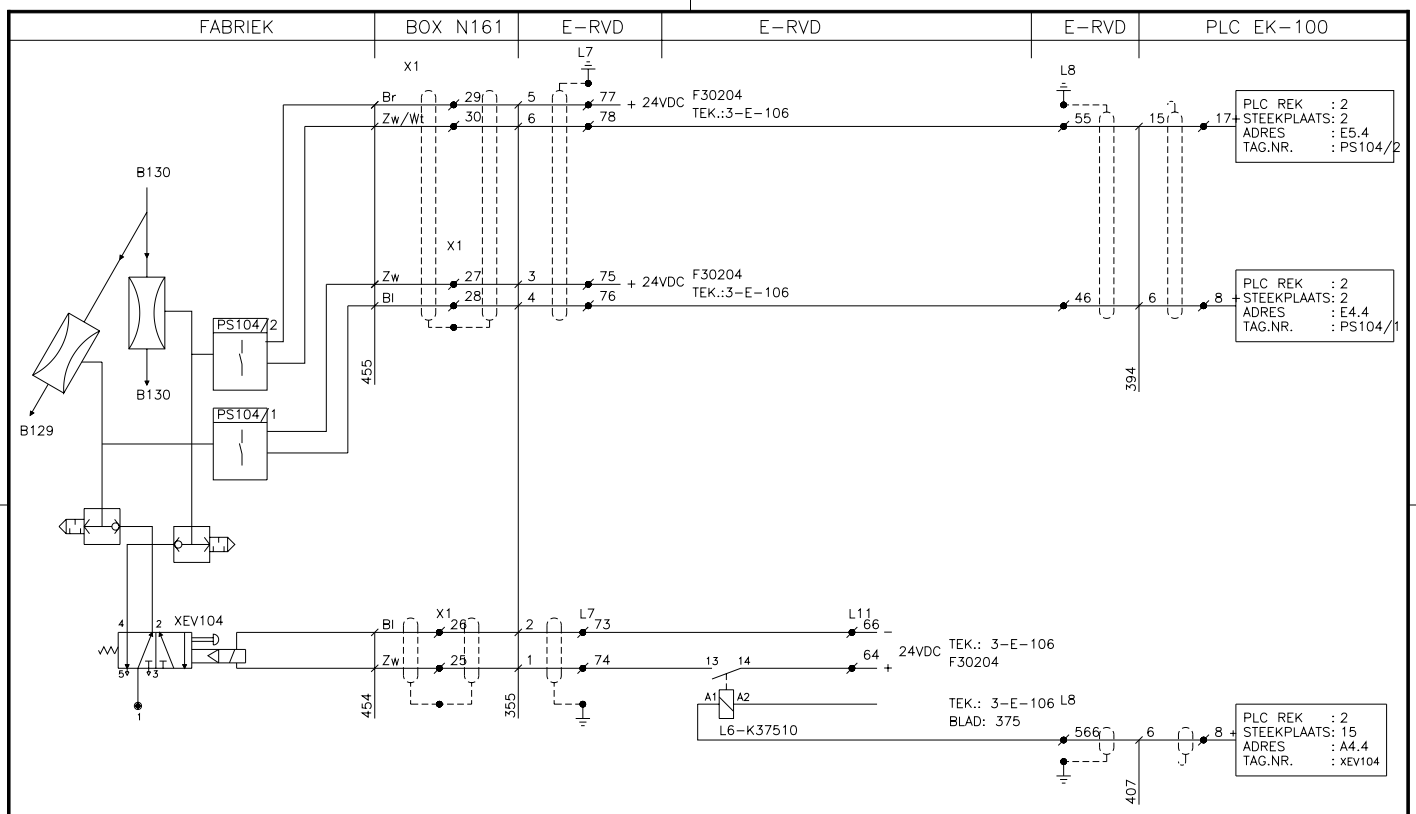


| | | | | | |
|---|---|---|---|---|---|
| PS-104/2 | MARTONAIR M/1339 | | | | |
| PS-104/1 | MARTONAIR M/1339 | | | | |
| XEV-104 | MARTONAIR M/20151/122/N | | | | |
| TAG Nr.: | Fabrikaat en Type: | Spec./Magn. | Instelling | Meetbereik | Opm./Tek. |

| Rev.: | Date: | Disription: | Drawn by: | Ckd: | Seen by: |
|---|---|---|---|---|---|
| A | 15-12-1994 | AS BUILT | R.B. | J.S. | J.Li |
| 0 | | | | | |

HVL ELEKTROTECHNIEK
POSTBUS 1341
6201 BH MAASTRICHT
043-6190190

Client: LB METREX B.V.
Project: WARME STRAAT
Title: HOOK-UP KEUZEKLEP B-129/B-130
Tag number: X-104

| Drawn by: | Filenumber: | Scale: | Size: | Ordernumber: | Sub.: | Drawing number: | Sht.: | of: | Rev. |
|---|---|---|---|---|---|---|---|---|---|
| R.B. 15-12-1994 | 4104 | - : - | A3 | 9580 | 00 | 3-H-100 | 0000 | 0000 | A |

mm 0 10 20 30 40 50 60 70 80 90 100

Demo Version