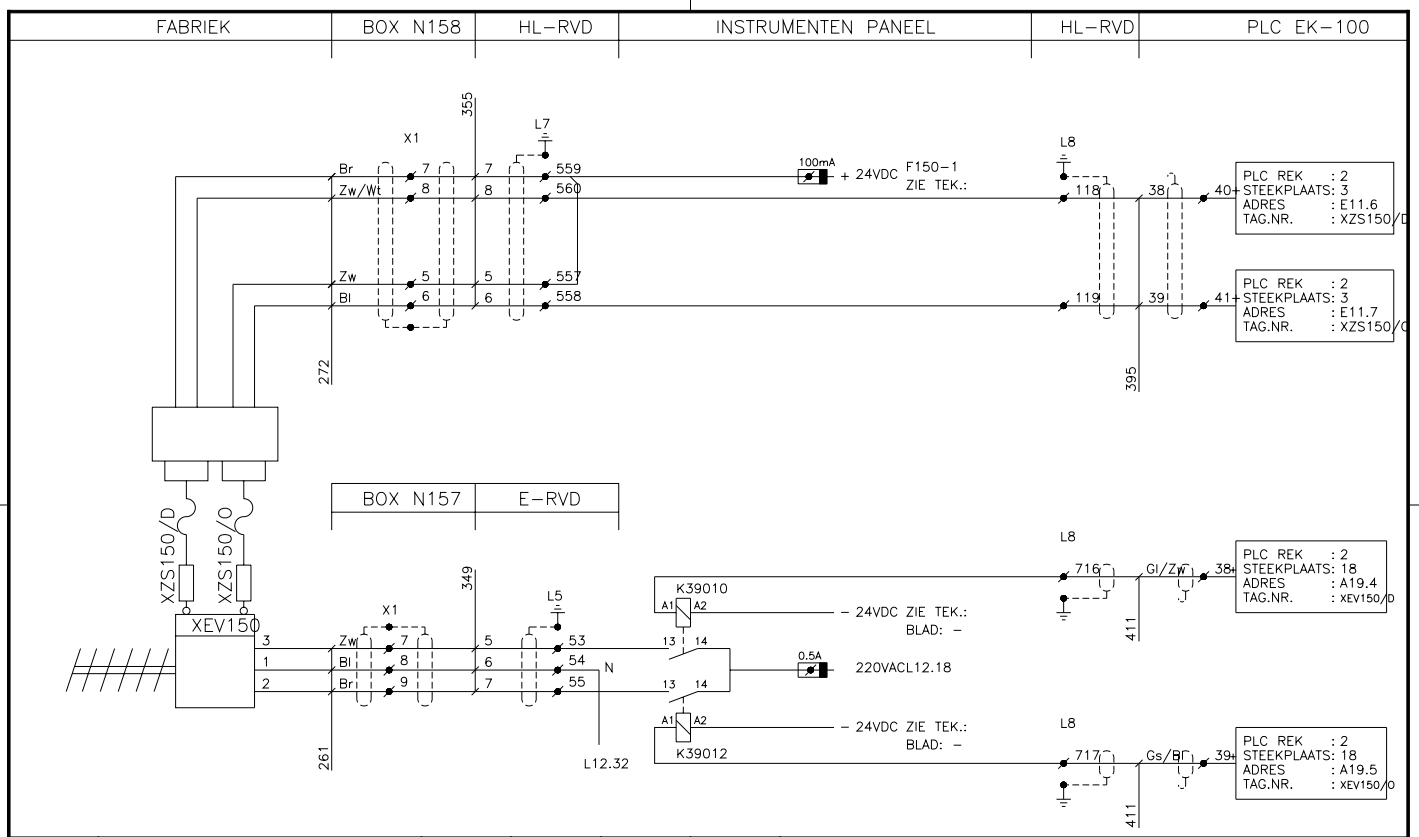

Demo Version