FABRIEK	BOX N154	E-RVD

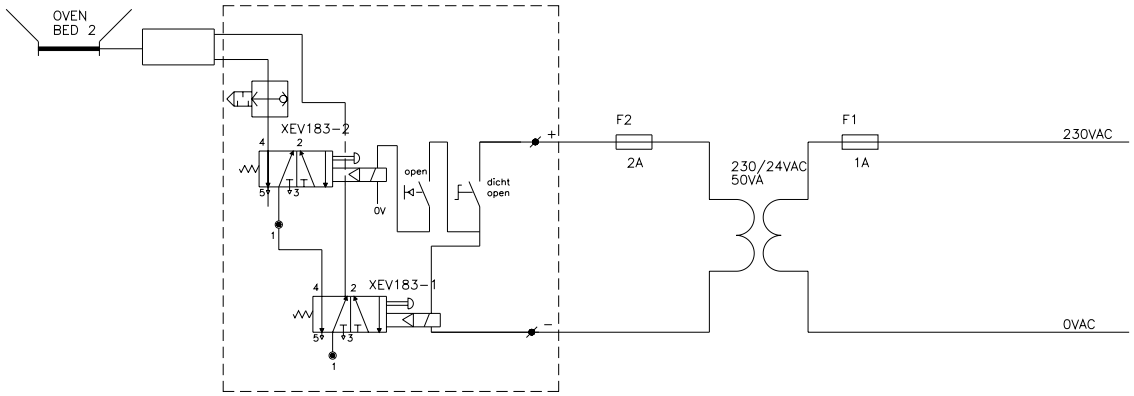

Rev.:	Date:	Disription:	Drawn by:	Ckd:	Seen by:
A	22-10-1996	AS BUILT	R.B.	J.L.	J.L.
0	15-02-1996	AS BUILT	K.K.	J.L.	J.L.

TAG Nr.:	Fabrikaat en Type:	Spec./Magn.	Nmstelling	Meetbereik	Opm./Tek.
XEV183-2	NUMATICS L22BA452BG00061				
XEV183-1	NUMATICS L22BA452BG00061				

HVL ELEKTROTECHNIEK
POSTBUS 1341
6201 BH MAASTRICHT
043-6190390

Client: LB METREX B.V.
Project: WARME STRAAT
Title: HOOK-UP KLEP X183-1/2
Tag number: X-183

Drawn by:	Filenumber:	Scale:	Size:	Ordernumber:	Sub.:	Drawing number:	Sht.:	of:	Rev.
K.K. 16-02-1996	96183	- : -	A3	96923/4	00	3-H-100	00000	00000	A

0 10 20 30 40 50 60 70 80 90 100 mm

Demo Version