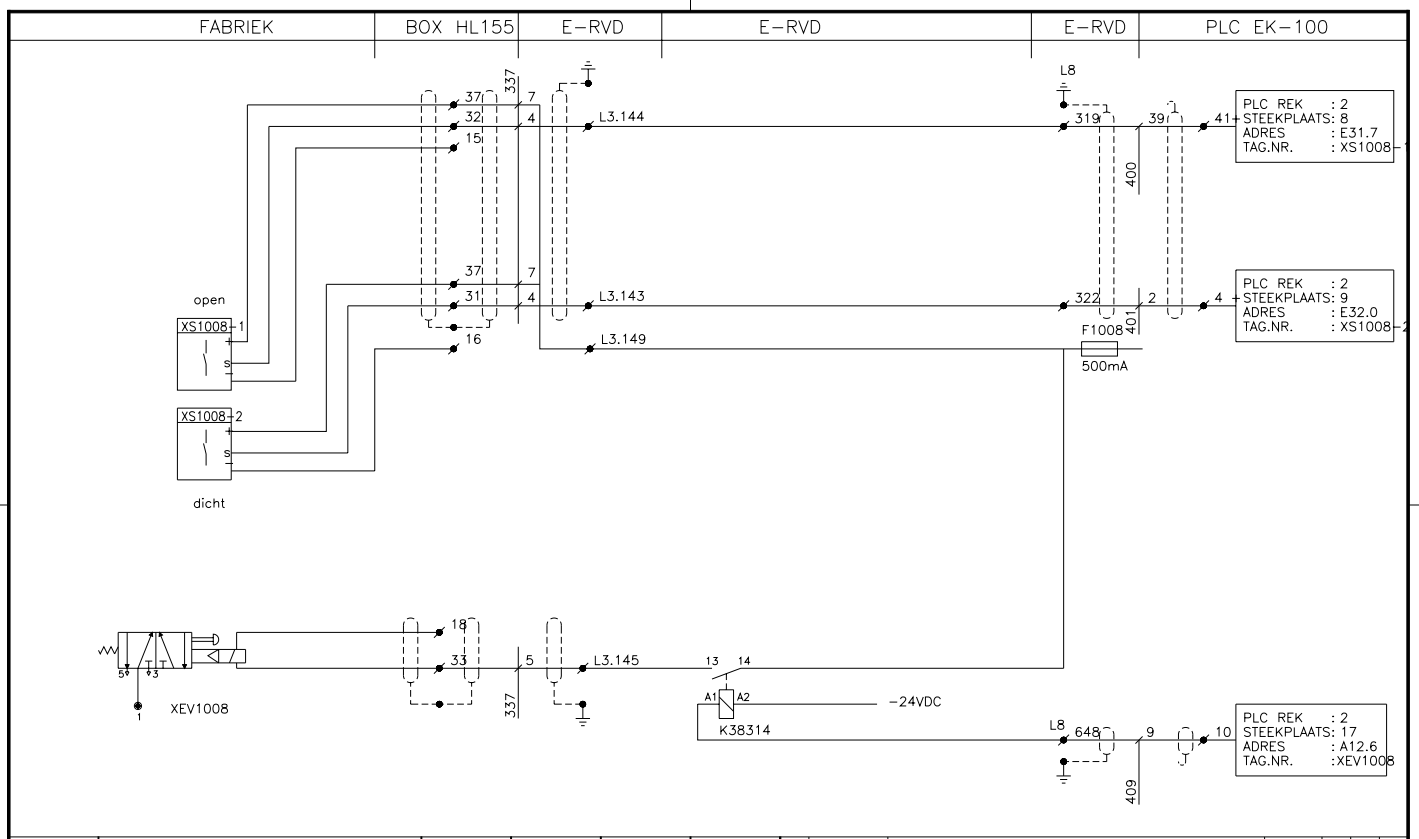

TAG Nr.:	Fabrikaat en Type:	Spec./Magn.	Instelling	Meetbereik	Opm./Tek.
XEV1008					
XS1008-1	OMRON TL-X1				
XS1008-2	OMRON TL-X1				

Rev.:	Date:	Disription:	Drawn by:	Ckd:	Seen by:
A					
0	17-01-1996	AS BUILT	K.K.	J.L.	J.L.

HVL ELEKTROTECHNIEK
POSTBUS 1541
6201 BH MAASTRICHT
043-6190190

Client: LB METREX B.V.
Project: VASTVERF
Title: SNELSLUITKLEP
Tag number: PV1008

Drawn by:	Filenumber:	Scale:	Size:	Ordernumber:	Sub.:	Drawing number:	Sht.:	of:	Rev.
K.K. 17-01-1996	PV1008	- : -	A3	95923/14	00	3-H-100	00000	00000	0

Demo Version