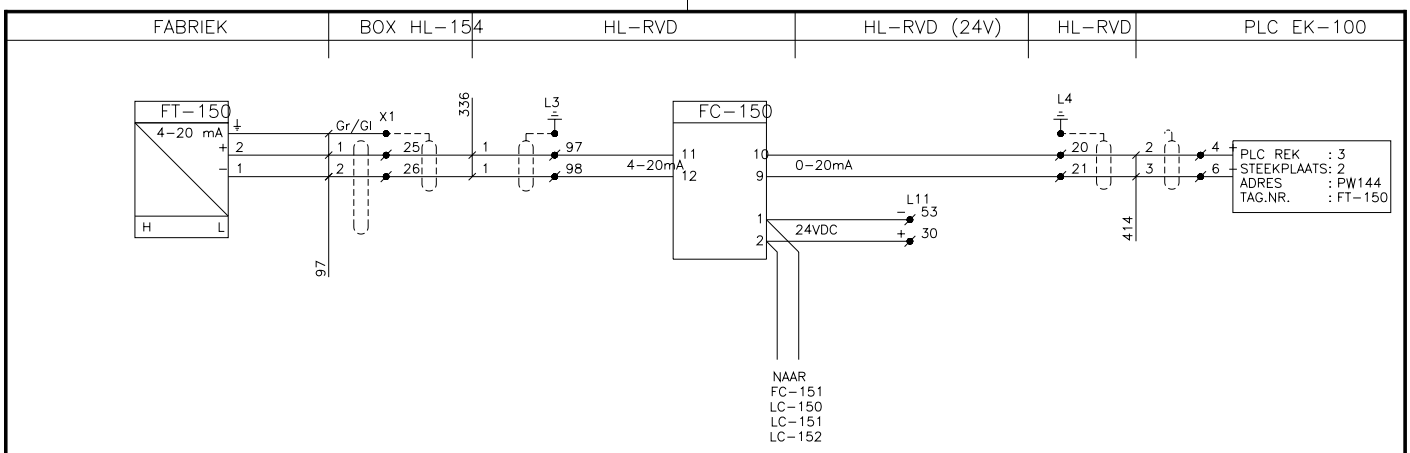

FC-150	ATM NC 22-028-020				
FT-150	ROSEMOUNT SMART 1151		0-500 mBAR	0-600 mBAR	
TAG Nr.:	Fabrikaat en Type:	Spec./Magn.	Nmstelling	Meetbereik	Opm./Tek.

Rev.:	Date:	Disription:	Drawn by:	Ckd:	Seen by:
A	14-12-1994	AS BUILT	R.B.	J.S.	J.Li
0					

HVL ELEKTROTECHNIEK
POSTBUS 1541
6201 BH MAASTRICHT
043-6190190

Client: LB METREX B.V.
Project: WARME STRAAT
Title: HOOK-UP
STOOMSTROOM VAN NEVEN- EN HOOFDDRUM V-150
Tag number: F-150

Drawn by:	Filenumber:	Scale:	Size:	Ordernumber:	Sub.:	Drawing number:	Sht.:	of:	Rev.
R.B. 14-12-1994	4150	- : -	A3	9580	00	3-H-100	0000	0000	A

mm 0 10 20 30 40 50 60 70 80 90 100

Demo Version