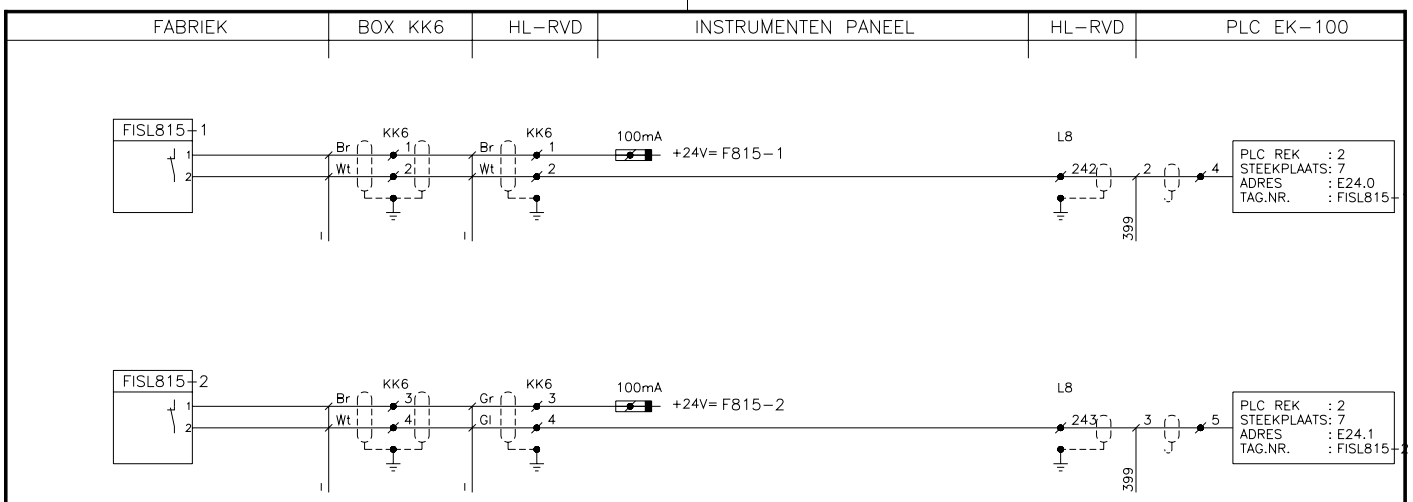

Rev.:	Date:	Disription:	Drawn by:	Ckd:	Seen by:
C	14-12-1994	AS BUILT	N.S.	J.S.	J.Li
B	26-10-1993	SEVERAL CHANGES	R.G.	J.S.	J.Li

HVL ELEKTROTECHNIEK
POSTBUS 1341
6201 BH MAASTRICHT
043-6190190

Client: LB METREX B.V.
Project: ROOKGAS ONTZWAVELING
Title: HOOK-UP
TOEVOER SPROEIERS SCRUBBER C815 IN Z815
Tag number: F-815

Drawn by:	Filenumber:	Scale:	Size:	Ordernumber:	Sub.:	Drawing number:	Sht.:	of:	Rev.
R.G. 18-08-1994	94815	- : -	A3	9580	00	3-H-800	0000	0000	C

TAG Nr.:	Fabrikaat en Type:	Spec./Magn.	Instelling	Meetbereik	Opm./Tek.
FISL815-2	PU				
FISL815-1	PU				

0 10 20 30 40 50 60 70 80 90 100 mm

Demo Version