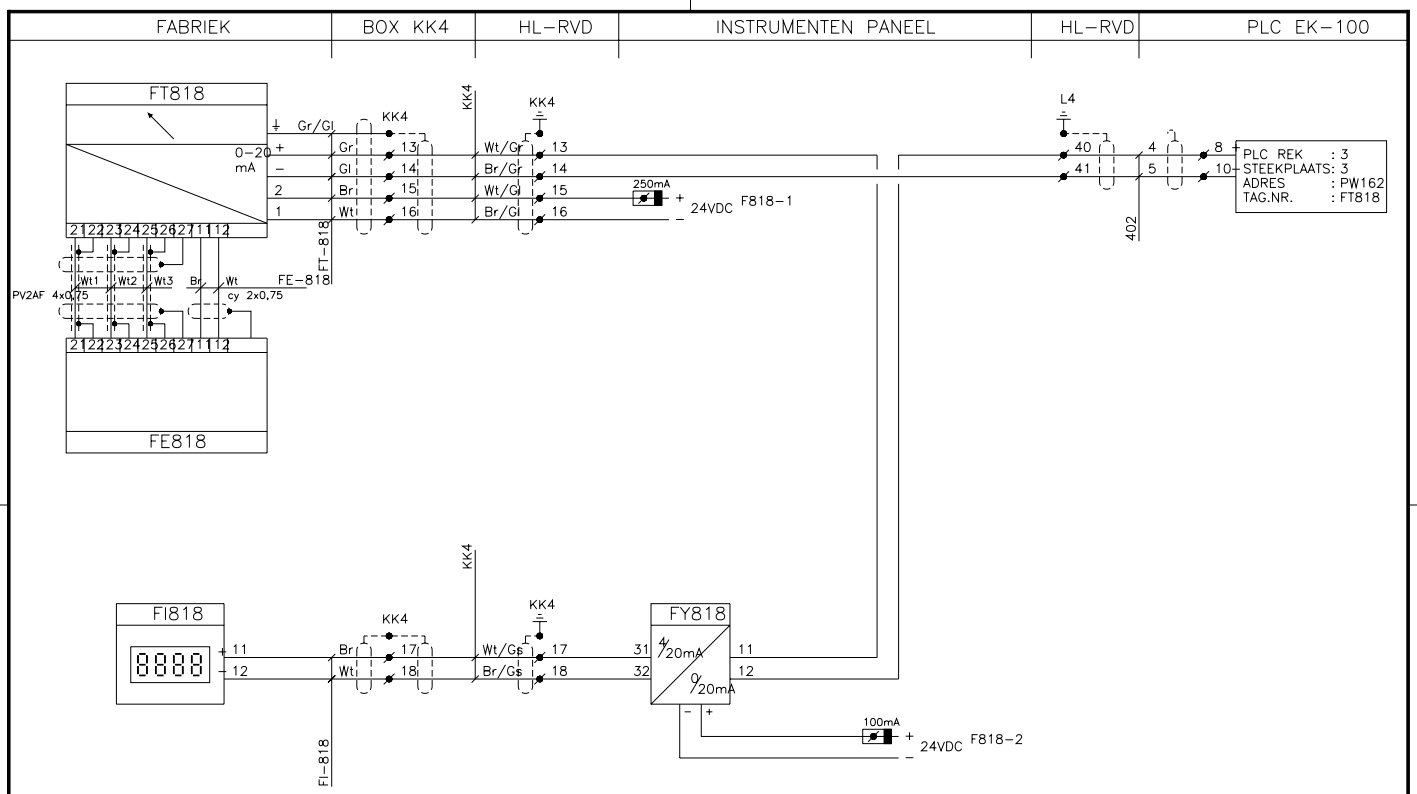

FY818	OMVORMER TET7 H & B			0-20/4-20mA	
FI818	LCD 704 H & B			4 - 20mA	
FT818	DTI 120 E & H			0 - 20mA	
FE818	DI 12 E & H		0-2,5	0,2 - 10	
TAG Nr.:	Fabrikaat en Type:	Spec./Magn.	Nmstelling	Meetbereik	Opm./Tek.

Rev.:	Date:	Disription:	Drawn by:	Ckd:	Seen by:
C	14-12-1994	AS BUILT	N.S.	J.S.	J.Li
B	25-10-1993	SEVERAL CHANGES	R.G.	J.S.	J.Li

HVL ELEKTROTECHNIEK
POSTBUS 1341
6201 BH MAASTRICHT
043-6116090

Client: LB METREX B.V.
Project: ROOKGAS ONTZWAVELING
Title: HOOK-UP WASVLOEISTOF NAAR KOLOM C818
Tag number: F-818

Drawn by:	Filenumber:	Scale:	Size:	Ordernumber:	Sub.:	Drawing number:	Sht.:	of:	Rev.
R.G. 18-08-1994	818	- : -	A3	9580	00	3-H-800	00	00	C

mm 0 10 20 30 40 50 60 70 80 90 100

Demo Version