FABRIEK	INSTRUMENTEN PANEEL	HL-RVD	PLC EK-100

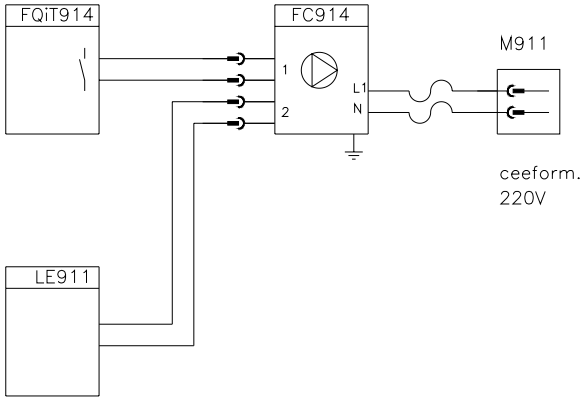

LE911	P.U. DOSEER UNIT LUBRON				
FC914	P.U. DOSEER UNIT LUBRON				
FQiT914	P.U. DOSEER UNIT LUBRON				
TAG Nr.:	Fabrikaat en Type:	Spec./Magn.	Nmstelling	Meetbereik	Opm./Tek.

Rev.:	Date:	Disription:	Drawn by:	Ckd:	Seen by:
A	15-12-1994	AS BUILT	N.S.	J.S.	J.Li
0	31-08-1994	FOR APPROVAL	M.V.	J.S.	J.Li

HVL ELEKTROTECHNIEK
POSTBUS 1341
6201 BH MAASTRICHT
043-6116090

Client: LB METREX B.V.
Project: ROOKGAS ONTZWAVELING
Title: HOOK-UP
DOSEER UNIT CHEMIKALIEN TOEVOER NAAR V910
Tag number: F-914

Drawn by:	Filenumber:	Scale:	Size:	Ordernumber:	Sub.:	Drawing number:	Sht.:	of:	Rev.
M.V. 31-08-1994	94914	- : -	A3	9580	00	3-H-900	00000	00000	A

mm 0 10 20 30 40 50 60 70 80 90 100

Demo Version