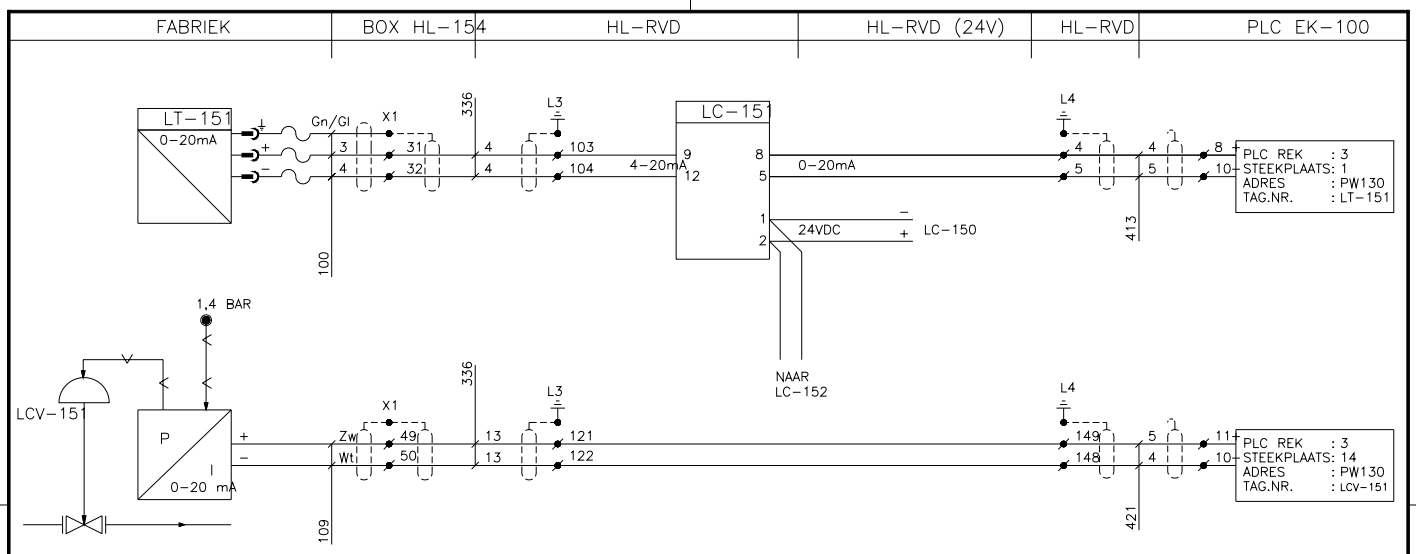

LC-151	ATM NG-44-028-020				
LCV-151	FISHER CONTOL 657-ED	33			
LT-151	FOXBORO E13DM	77	0-415mmWK	0-510mmWK	
TAG Nr.:	Fabrikaat en Type:	Spec./Magn.	Nmstelling	Meetbereik	Opm./Tek.

Rev.:	Date:	Disription:	Drawn by:	Ckd:	Seen by:
A	14-12-1994	AS BUILT	P.G.	J.S.	J.Li
0					

HVL ELEKTROTECHNIEK
POSTBUS 1541
6201 BH MAASTRICHT
043-6190190

Client: LB METREX B.V.
Project: WARME STRAAT
Title: HOOK-UP
NIVOREGELING HOOFDDRUM V-151

Tag number: L-151

Drawn by:	Filenumber:	Scale:	Size:	Ordernumber:	Sub.:	Drawing number:	Sht.:	of:	Rev.
P.G. 14-12-1994	4151	- : -	A3	9580	00	3-H-100	00	00	A

0 10 20 30 40 50 60 70 80 90 100 mm

Demo Version