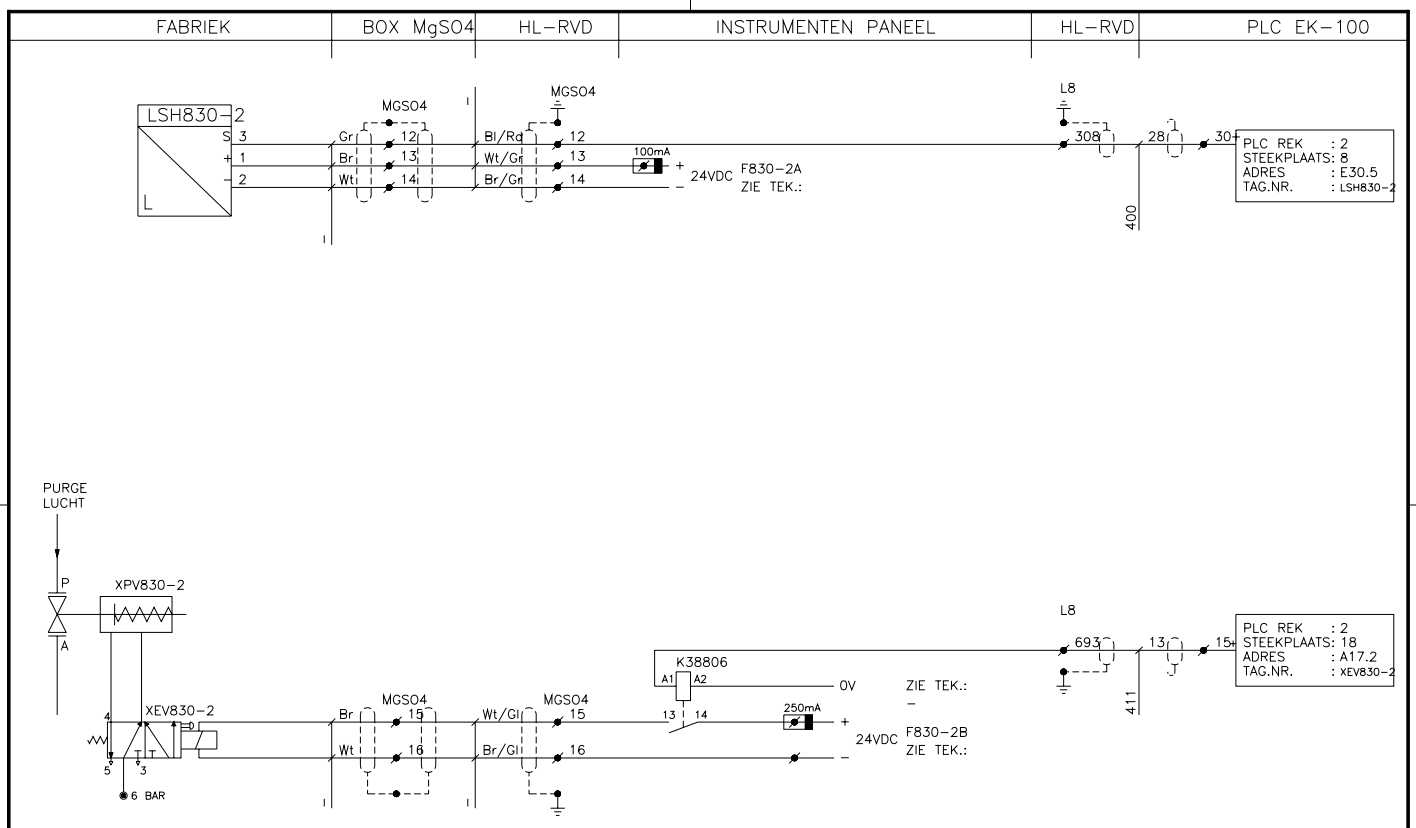

XPV830-2	PU				
XEV830-2	PU				
LSH830-2	PU				
TAG Nr.:	Fabrikaat en Type:	Spec./Magn.	Nmstelling	Meetbereik	Opm./Tek.

Rev.:	Date:	Disription:	Drawn by:	Ckd:	Seen by:
A	06-09-1994	FOR APPROVAL	M.V.	J.S.	J.Li
0	25-08-1994	FOR APPROVAL	R.G.	J.S.	J.Li

HVL ELEKTROTECHNIEK
POSTBUS 1341
6201 BH MAASTRICHT
043-6116090

Client: LB METREX B.V.
Project: ROOKGAS ONTZWAVELING
Title: HOOK-UP MgSO4 FILTER
LEVEL SWITCH / KLEP XPV 830-2
Tag number: L830-2

Drawn by:	Filenumber:	Scale:	Size:	Ordernumber:	Sub.:	Drawing number:	Sht.:	of:	Rev.
R.G. 25-08-1994	830-2	- : -	A3	9580	00	3-H-800	00000	00000	A

0 10 20 30 40 50 60 70 80 90 100 mm

Demo Version